MICRO SWITCH
a Honeywell Division
FED.MFG.CODE 91929

SWITCH-BASIC

CATALOG LISTING
BZ-2R55-A2-S

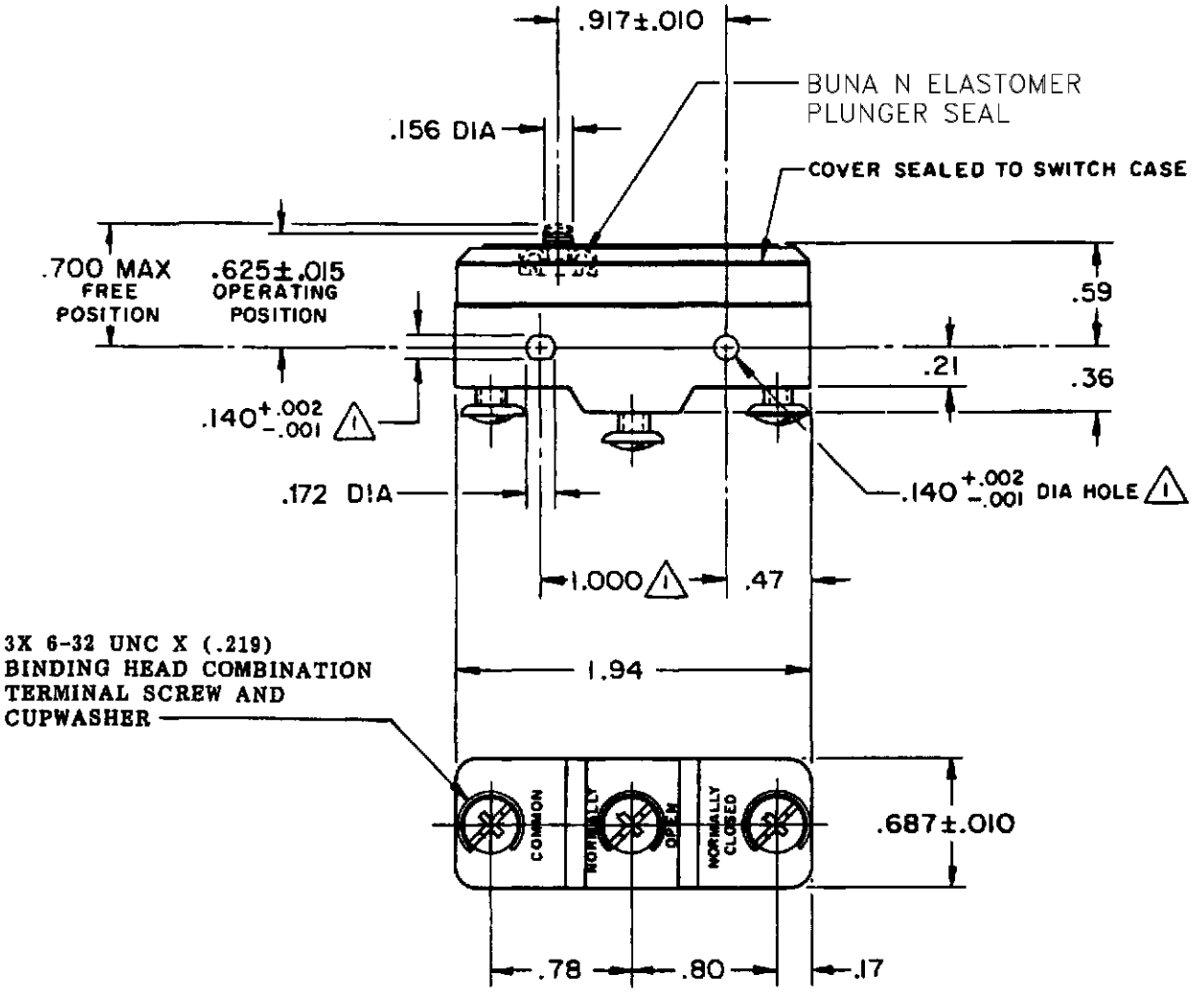

NOTE-
1 MOUNTING HOLES WILL ACCEPT PINS OR SCREWS OF .139 MAX DIA ON 1.000±.002 CENTERS
2 – SEALED CONSTRUCTION PROVIDES SPLASH RESISTANCE

THIS DRAWING COVERS A PROPRIETARY ITEM AND IS THE PROPERTY OF MICRO SWITCH, A DIVISION OF HONEYWELL. THIS DRAWING IS NOT TO BE COPIED OR USED WITHOUT THE APPROVAL OF MICRO SWITCH.

THIRD ANGLE PROJECTION

CHARACTERISTICS	ELECTRICAL DATA	SCALE FULL / DO NOT SCALE PRINT
OPERATING FORCE — — — — — 9–15 OZ	CONTACT ARRANGEMENT	UNLESS OTHERWISE SPECIFIED TOLERANCES ARE
RELEASE FORCE — — — — — — 4 OZ MIN	L96 L288 L299 L306 15A-125, 250, OR 480 VAC 1/8 HP-125 VAC; 1/4 HP-250 VAC 1/2 A-125 VDC; 1/4 A-250 VDC 16A 250V~T85 5E4	ONE PLACE (.0) ±.030
DIFFERENTIAL TRAVEL — —.0004–.0025		TWO PLACE (.00) ±.015
OVERTRAVEL — — — — — — — .005 MIN		THREE PLACE (.000) ±.005
		ANGLES ±
		WEIGHT

REPLACES
RELEASE NO. PR-6725
CATALOG LISTING BZ-2R55-A2-S PAGE 1 OF 1
ISSUE 6
CHECK
REVISIONS
A CO-93074 CCK 17 JUN 98
CHECK
17 JUN 98
J A F
CHECK
17 JUN 98
DRAWN C C K 17 JUN 98
FORMTEK